REMOTE OIL FILTER MOUNT

PART NO. ENV-140

MADE IN USA

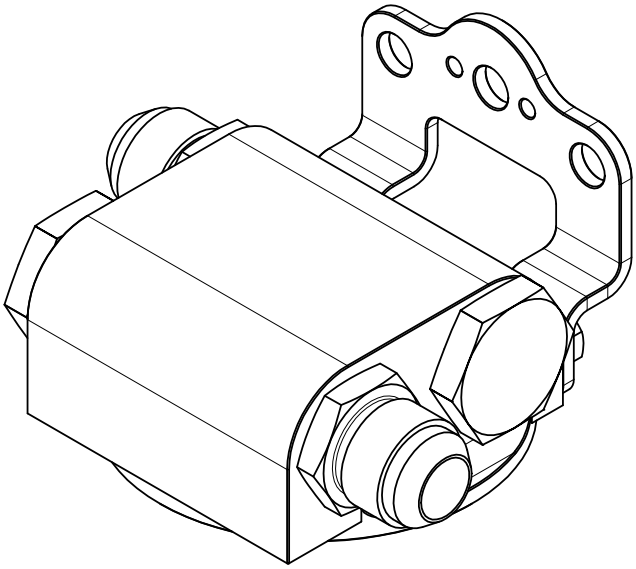

Important: Read these instructions in their entirety prior to installation.

For contact information, visit www.improvedracing.com

Copyright © 2008-2024 Improved Racing Products, LLC. All rights reserved.

Rev 240421

APPLICATIONS

- The ENV-140 supports a maximum filter OD of 3.44 inches and is offered in two oil filter thread sizes:
  - **M20 x 1.50**
  - **M22 x 1.50**
  - **3/4”-16**
  - **13/16”-16**

PARTS LIST TABLE

Qty	Part Number	Description
1	ENV-140	Remote Filter Mount
1	HSC-10XX	Oil Filter Screw (Choose Thread Size)
1	ENV-170-05-B	Mounting Bracket
2	HSC-1040	Mounting Bracket Screw
1	ENV-170-07	Backing Plate for Mounting Bracket
2	OX-10-XX	-10 SAE J1926-1 O-ring Boss Adapter Fittings (Optional)
2	PO-10	-10 SAE J1926-1 O-ring Boss Plug

TECHNICAL SPECIFICATIONS TABLE

Max Operating Temp	302°F (150°C)
Min Operating Temp	-22°F (-30°C)
Max Operating Pressure	300 psi (20.68 bar)
Max Oil Filter O.D.	3.44” (87.4 mm)
Dimensions (W x H x D)	3.44 inch x 1.63 inch x 3.44 inch (87.4 mm x 41.4 mm x 87.4 mm)
Weight (No Hardware)	12.2 ounces (346.5 grams)
Fitting Ports	4 x -10 SAE J1926-1 Straight Thread O-ring Boss Ports, $^{7}/_{8}$”-14 UNF - 2B
Housing Material	CNC-Machined 6061-T6 Billet Aluminum
Housing Finish	MIL-A-8625 Type II Anodizing
Seals	Viton (FKM) Elastomer

Filter Screw Material	CNC-Milled 410 Stainless Steel
Mounting Brackets	8 Gauge 5052-H32 Aluminum, MIL-A-8625 Type II Anodizing
Mounting Bracket Backing Plate	8 Gauge 5052-H32 Aluminum, MIL-A-8625 Type II Anodizing, M8x1.25 Threaded Inserts

PRODUCT NOTES

⚠ **WARNING: Not recommended for use with corrosive fluids.**

- A list of compatible filters is available on the product page on Improved Racing's website at www.improvedracing.com.

PLUMBING AND FLOW CONFIGURATIONS

- The ENV-140 features two inlet and two outlet ports. The additional ports can be used for accessories or sensors.
- Accessories such as oil accumulators and turbochargers should only be supplied with filtered oil (OUT ports).
- Some example configurations are shown in Figure 1.

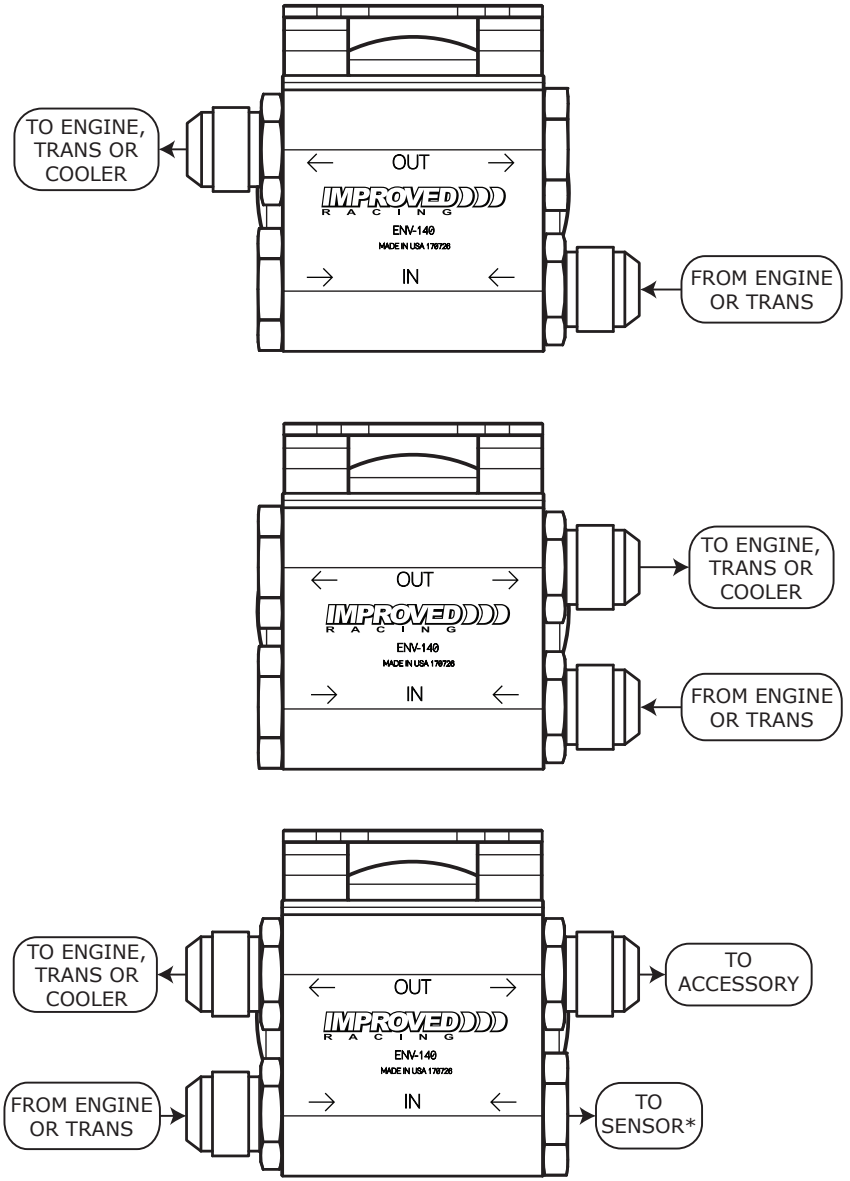

Figure 1 - Plumbing and Flow Configuration Examples

MOUNTING

- Attach the mounting bracket to ENV-140 using the provided M6 screws as shown in Figure 2.
- Use at least two holes to secure the ENV-140 to a sturdy part of the vehicle such as the frame or firewall using M8 or $^{5}/_{16}$" hardware.
- Use the ENV-170-07 backing plate for reinforcement when through-mounting to thinner panels.

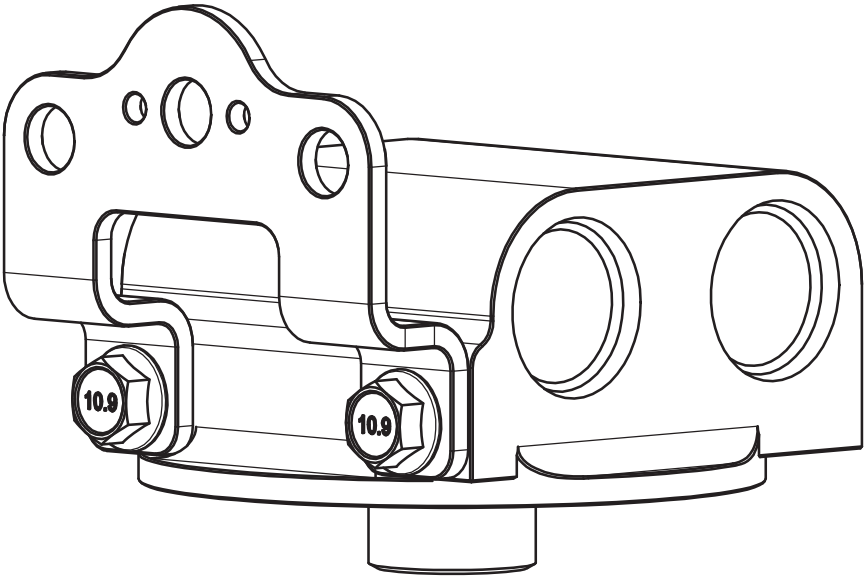

Figure 2 - Attaching the Mounting Bracket

BEFORE YOU BEGIN

⚠ **WARNING: This product should only be installed by a qualified mechanic. Improper installation could result in severe engine damage.**

Tip: Use aluminum tools to avoid damaging the aluminum fittings.

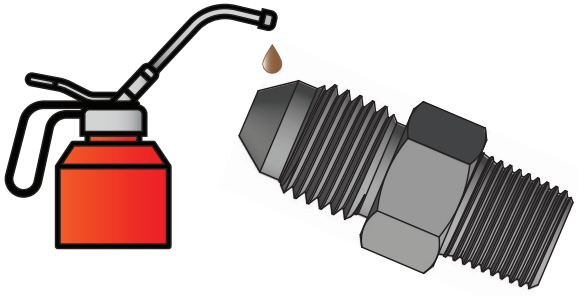

Lubricate the fitting flares for a better seal.

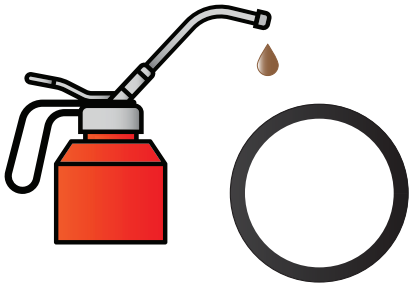

Lubricate O-rings prior to installation to prevent damage and ensure a leak-free seal.

INSTALLATION INSTRUCTIONS

1. The parts kit includes a 2 ml capsule of high-strength thread locker. Remove the cap and use scissors to snip open the capsule's applicator tip.
2. Optional: Apply high-strength (red) thread locker to the threads on the **SHORT END ONLY** of the HSC-10XX filter screw as shown in Figure 3.

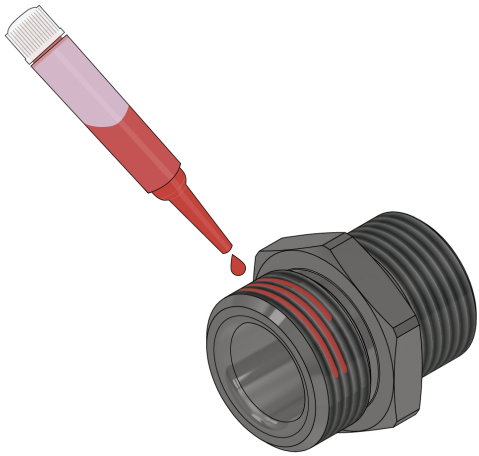

Figure 3 - Apply Thread Locker to the Short End of the Filter Screw

3. Screw the short end of the HSC-10XX filter screw into the ENV-140 as shown in Figure 4 and torque to approximately **25 lb-ft (34 N-m)**. Allow at least 10 minutes for the thread locker to set. It will be fully cured in 24 hours.

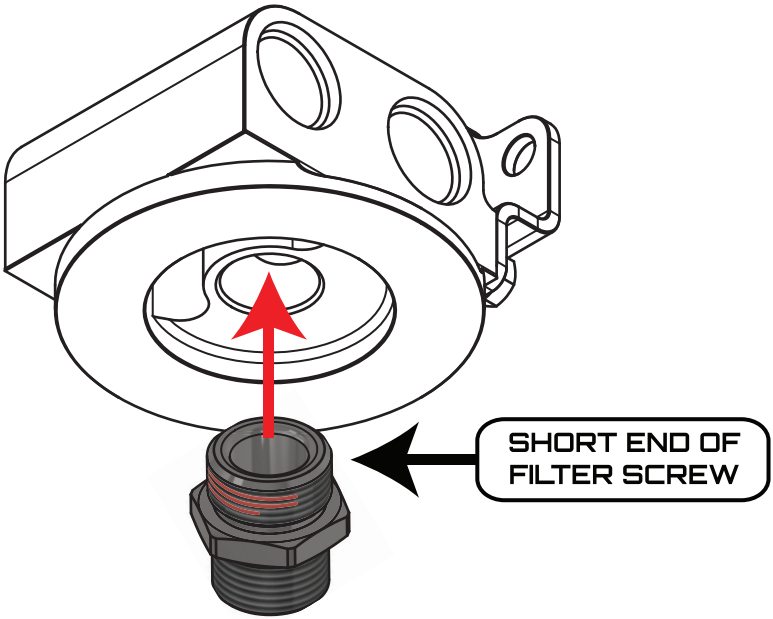

Figure 4 - Screw the Filter Screw into the Filter Housing

4. Install the line adapter fittings into ENV-140. Torque the fittings to approximately **20 lb-ft (27 N-m)**.
5. Secure the filter mount to the vehicle using the provided mounting bracket and M8 or $^{5}/_{16}$" hardware.
6. Configure and assemble the hydraulic lines for the system.
7. Pre-fill and install the oil filter after lubricating the seal with oil.
8. If using a heat exchanger, pre-fill the heat exchanger with fluid prior to connecting the lines.
9. Connect and tighten the system lines. DO NOT overtighten.
10. If using a heat exchanger, secure the heat exchanger to the vehicle.
11. Refill the all fluids in the system to their proper levels.
12. Prime the system to build fluid pressure and fill the lines and heat exchanger (if applicable) with oil before starting. This can be achieved by temporarily removing the fuel pump fuse to prevent starting, then cranking the engine over 2-3 times for about 5 seconds at a time.
13. Start the vehicle and inspect for leaks.
14. Turn-off the vehicle and inspect the fluid level. Add fluid if necessary.
15. Re-inspect the hydraulic lines and fittings for leaks after 1-2 heat cycles.

Installation is now complete. Thank you for purchasing an Improved Racing product!