CCS OIL CATCH CAN KIT FOR 2025+ FORD F-150 2.7L ECOBOOST V6

PART NO. CCS-FR-108

MADE IN USA



Important: Read these instructions in their entirety prior to installation.

For contact information, visit www.improvedracing.com
Copyright © 2008-2026 Improved Racing Products, LLC. All rights reserved.

Rev 260325

PARTS CHECK

- Visit the website product page for technical data and to confirm all parts have arrived by checking the images.

INSTALLATION INSTRUCTIONS

BEFORE YOU BEGIN

⚠ **WARNING: This product should be installed by a qualified mechanic.**

⚠ **WARNING: Improper installation could result in severe engine damage.**

- Lubricate all quick connect fitting barbs before connecting the hoses.
- Lubricate all visible O-rings prior to installation to prevent damage and ensure a leak-free seal.
- Use aluminum tools to avoid damaging the aluminum fittings.

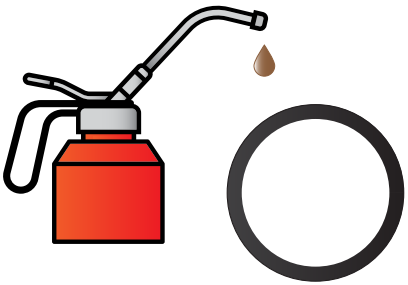

PREPARE THE CAR

⚠ **WARNING: Confirm the car is not hot prior to installation.**

1. Open the hood to access the engine compartment.
2. Use a 10 mm tool to disconnect the battery.
3. Use a 10 mm tool to remove the engine cover.
4. Find the tube on the passenger side of the engine, shown in Figure 1.



Figure 1 - PCV Tube Location on Engine

5. Remove the tube by lifting and rotating the tab, shown in Figure 2.

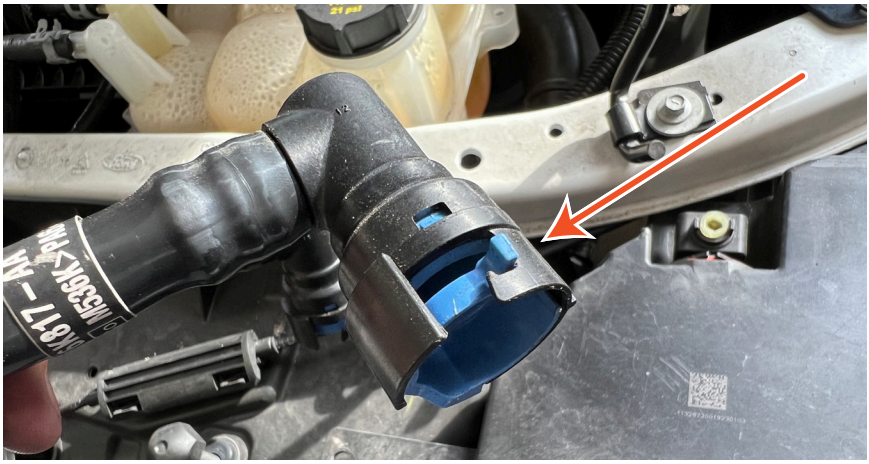

Figure 2 - PCV Tube Release Tabs

6. Set the tube aside: This part will no longer be used.

MOUNT THE CATCH CAN BRACKET

1. Locate the ground wire studs on the firewall, shown in Figure 3, and remove the nuts with a 15 mm tool.
2. If not already installed on the middle stud from the factory, relocate the ground wire onto the middle stud as shown in Figure 3.
3. If the wire was moved, reinstall the nut onto the stud and relocated wire, then tighten to feel.



Figure 3 - Ground Wire Studs on Firewall

4. Install the carrier bracket onto the firewall studs as shown in Figure 4.



Figure 4 - Carrier Bracket Installed onto Firewall

5. Use a 15 mm tool to reinstall the ground stud nut.
6. Tighten to feel.

Use the M10 nut included with this kit if Ford did not equip the truck with multiple firewall ground nuts.

7. Use a 10 mm tool to install the M6 flange nut included with this kit.
8. Tighten to feel.
9. Use a 10 mm tool to install the included 90° catch can mounting bracket, wire lanyard and M6 flange screws.

The lanyard should be installed to the top screw.

10. Torque both bracket screws to 100 lb-in (11 N-m).

MOUNT THE CATCH CAN

1. Remove the nut from the catch can.
2. Insert the catch can through the large hole in the mounting bracket.
3. Position the pin into the bracket hole shown in Figure 5.

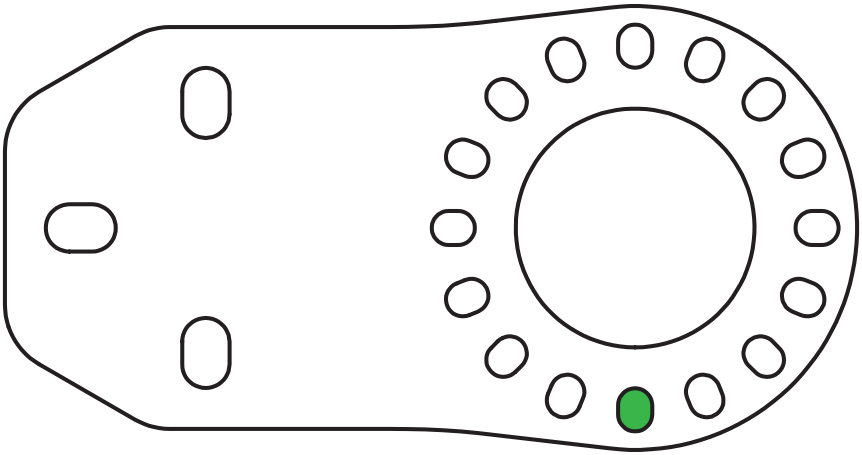

Figure 5 - Correct Bracket Hole for Pin on Top of Catch Can

4. Thread the nut onto the catch can and tighten with a $^{5}/_{8}$" wrench.

When hand tightening, smear a dab of anti-seize around the threads to guarantee the nut is properly tightened.

CONNECT THE LINES

1. Install the 90° adapter fittings in the IN and OUT ports of the catch can:
    a. Confirm the O-ring is on the smooth part of the fitting.
    b. Turn the free spinning nut down flush to the O-ring.
    c. Install the fittings into the IN and OUT port, confirming the nut remains flush and forces the O-ring completely inside the gland.
    d. Position the fittings as shown in Figure 6.
    e. Hold the fitting in that position, then tighten the nut between 13 to 16 lb-ft (17 to 22 N-m).

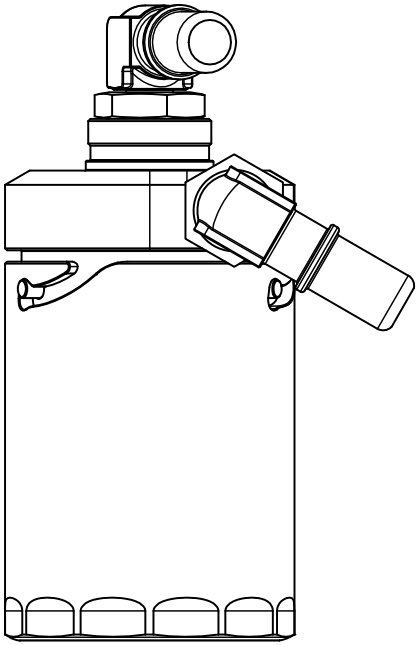

Figure 6 - OUT Adapter Fitting Placement

2. Refer to Figure 7 and connect the shorter hose as follows:
    a. 45° fitting to the blue/brown PCV valve.
    b. 90° fitting to the catch can IN port.
3. Refer to Figure 7 and connect the longer hose as follows:
    a. 45° fitting to the catch can OUT port.
    b. 45° fitting to the intake manifold.



Figure 7 - Lines Connected to Catch Can & Engine

COMPLETE THE INSTALL

1. Confirm all mounting hardware is properly fastened.
2. Confirm all hoses are properly connected.
3. Attach the safety lock clip to the lanyard and install onto the catch can.
4. Reconnect the battery.
5. Reinstall the engine cover.
6. Start the vehicle and check for signs of a vacuum leak.
   a. Troubleshoot and check connections if necessary.
7. Confirm the safety lock clip is installed in the can before closing the hood.

Installation is now complete. Thank you for purchasing an Improved Racing product!