# CCS OIL CATCH CAN KIT FOR 05-23 DODGE MOPAR 5.7L & 6.4L HEMI CARS

## PART NO. CCS-CH-102

MADE IN USA




Important: Read these instructions in their entirety prior to installation.

For contact information, visit www.improvedracing.com
Copyright © 2008-2024 Improved Racing Products, LLC. All rights reserved.

Rev 240312

## APPLICATIONS & PARTS CHECK

- Visit the website product page to confirm vehicle application and confirm all parts have arrived by checking the images:

## BEFORE YOU BEGIN

**WARNING: This product should be installed by a qualified mechanic.**

**WARNING: Improper installation could result in severe engine damage.**

Lubricate all quick connect fitting barbs before connecting the hoses.

Lubricate all visible O-rings prior to installation to prevent damage and ensure a leak-free seal.

Use aluminum tools to avoid damaging the aluminum fittings.

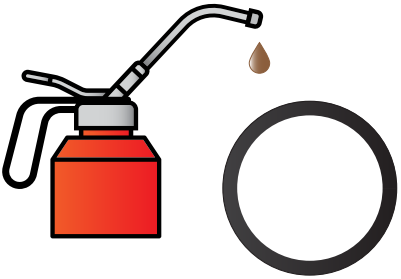

# INSTALLATION INSTRUCTIONS

⚠ **WARNING: Confirm the car is not hot prior to installation.**

## PREPARING THE CATCH CAN

1. Open the hood to access the engine compartment.
2. If not using a remote drain line:
   a. Install the drain plug included with this kit.
   b. Torque the drain plug 13 to 16 lb-ft (17 to 22 N-m).
3. If using a remote drain line:
   a. Install your preference of -6 ORB adapter fitting.
   b. Torque the fitting between 13 to 16 lb-ft (17 to 22 N-m).
4. Insert the catch can through the large hole in the mounting bracket.
5. Position the catch can pin into the bracket hole shown in Figure 1.

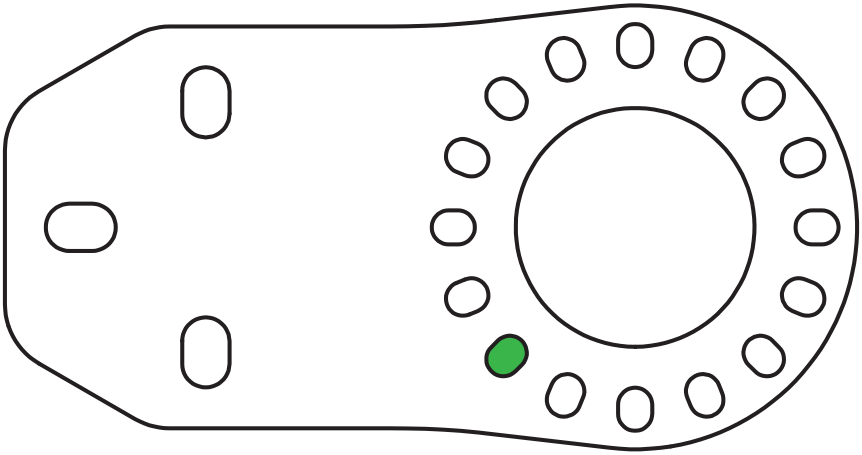

**Figure 1 - Bracket Hole for Can Pin**

6. Thread the nut onto the catch can and tighten with a $^{5}/_{8}$" wrench.

💡 When hand tightening, smear a dab of anti-seize into the threads to guarantee the nut is properly tightened.

7. Install the safety lock clip (refer to CCS manual for more information).
8. Install the 90° adapter into the IN port on the catch can and angle the fitting straight down.

9. Torque the fittings between 13 to 16 lb-ft (17 to 22 N-m).
10. Install the 90° adapter into the OUT port of the catch can:
    a. Confirm the O-ring is on the smooth part of the fitting.
    b. Turn the free spinning nut down flush to the O-ring.
    c. Install the fitting into the OUT port, confirming the nut remains flush and forces the O-ring completely inside the gland.
    d. Position as shown in Figure 2.
    e. Tighten the nut between 13 to 16 lb-ft (17 to 22 N-m).

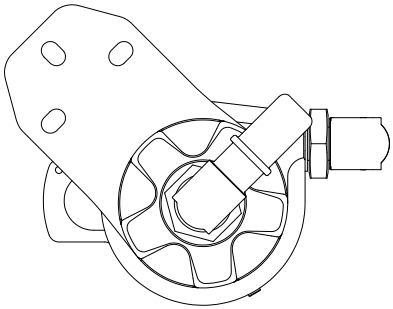

**Figure 2 - Preparing the Adapter Fittings**

## REMOVING THE FACTORY PCV HOSE

1. Remove the middle section of the factory PCV hose leaving the rubber connectors on the engine.
    a. For the 5.7L HEMI, this shown as Item 1 in Figure 3.
    b. For the 6.4L HEMI, this is shown as Item 3 in Figure 4.

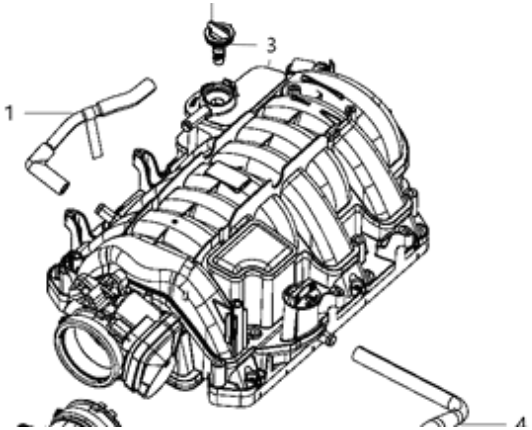


**Figure 3 - Removing the Middle Section Factory PCV Hose (5.7L)**

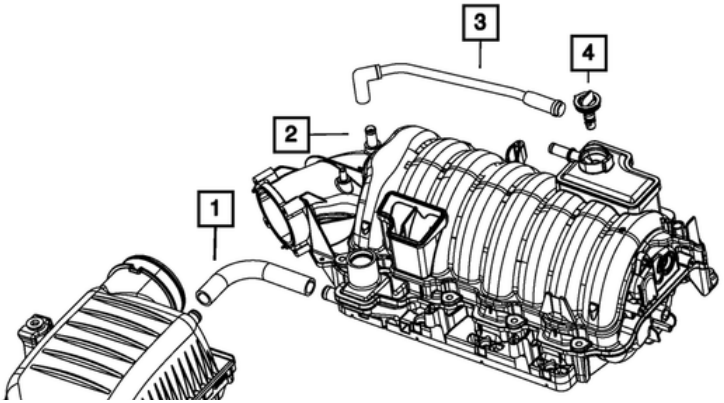


**Figure 4 - Removing the Middle Section Factory PCV Hose (6.4L)**

## INSTALLING THE CATCH CAN

1. Loosely install the adapter bracket onto the tab shown in Figure 5 using the included hardware.

The included rubber washers are placed between the adapter bracket, tab and flange screw to protect the paint.



**Figure 5 - Adapter Bracket Installed**

2. Install the catch can onto the adapter bracket as shown in Figure 6:
   - ⚠ Caution: Tight space makes it easy to scratch parts.
   a. Lightly tighten the assembly using the included thumb screw.
   b. Position the assembly so there is no contact with the vehicle.
3. Use a 15 mm tool and tighten the tab bracket until the silicone washers are lightly compressed.
   - ⚠ Do not overtighten.
   - 💡 Loctite® 243 is recommended for lasting and reliable fastening.



**Figure 6 - Installing CCS to the Adapter Bracket**

4. Connect the hoses as shown in Figure 7 and Figure 8.
5. Install the hose separator as shown in Figure 7 and Figure 8.

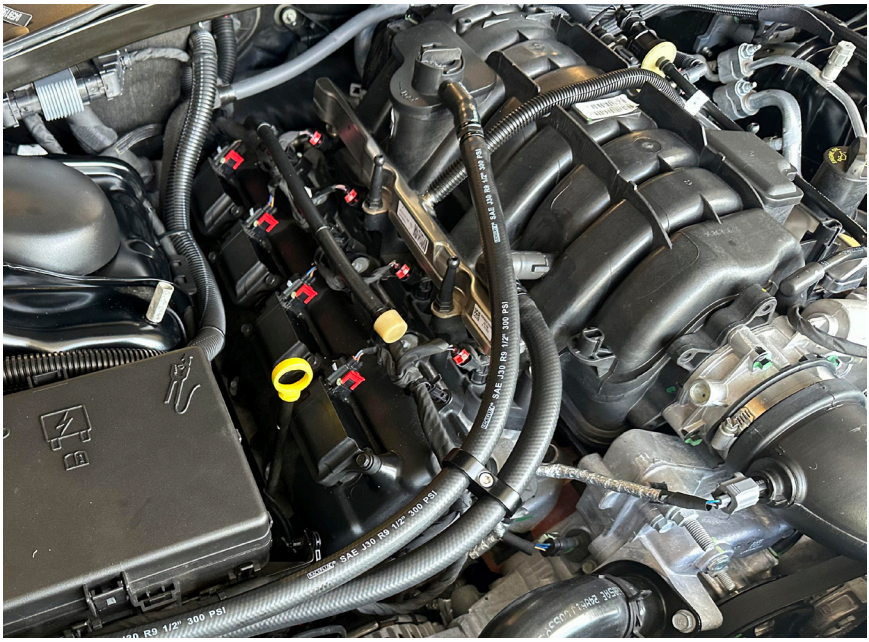


**Figure 7 - Connecting the Hoses (5.7L)**

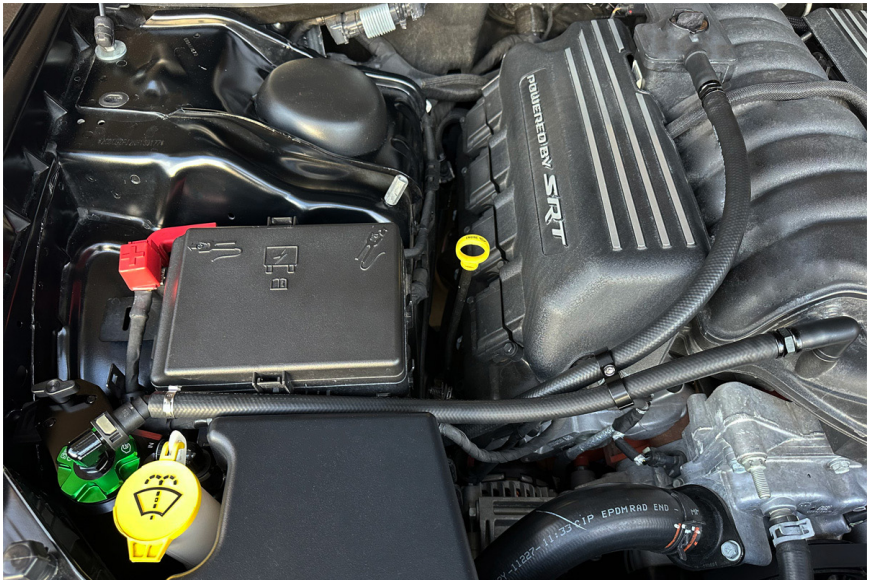


**Figure 8 - Connecting the Hoses (6.4L)**

## COMPLETING THE INSTALL

1. Confirm all mounting hardware is properly fastened.
2. Confirm all hoses are properly connected.
3. Confirm the hose separator is tight.
4. When applicable, confirm the drain hose is closed and properly secured to the vehicle.
5. Start the vehicle and check for signs of a vacuum leak.
    a. Troubleshoot and check connections if necessary.

Installation is now complete. Thank you for purchasing an Improved Racing product!