UNIVERSAL OIL COOLER SANDWICH PLATE WITH THERMOSTAT, 90-DEGREE FEMALE -10AN ORB THREADS

PART NO. ENV-135-TX

MADE IN USA

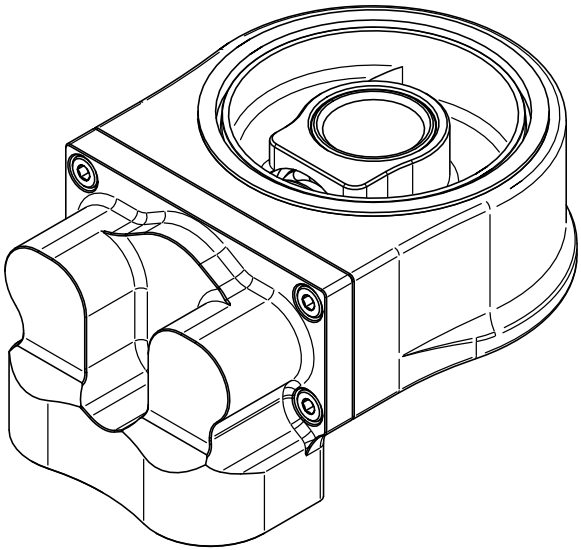

IMPORTANT: Please read these instructions in their entirety prior to installation.

For contact information, visit www.improvedracing.com

Copyright © 2008-2020 Improved Racing Products, LLC. All rights reserved.

Rev 200916

APPLICATIONS

- ENV-135 is compatible with vehicles that use canister oil filters.
  - Cartridge filters (European vehicles) are not directly supported.
- ENV-135 is offered in the following oil filter thread sizes:
  - $^{3}/_{4}$" - 16 UNF - 2A
  - $^{3}/_{16}$" - 16 UN - 2A
  - M20x1.50 - 6h
  - M22x1.50 - 6h

PARTS LIST & SCHEMATIC

Item	Qty	Part Number	Description
1	1	ENV-135	Thermostatic Sandwich Plate
2	1	HSC-104X	Oil Filter Adapter Screw (Choose Thread Size)
3	1	HRG-1022	AS568 -230 Square O-Ring

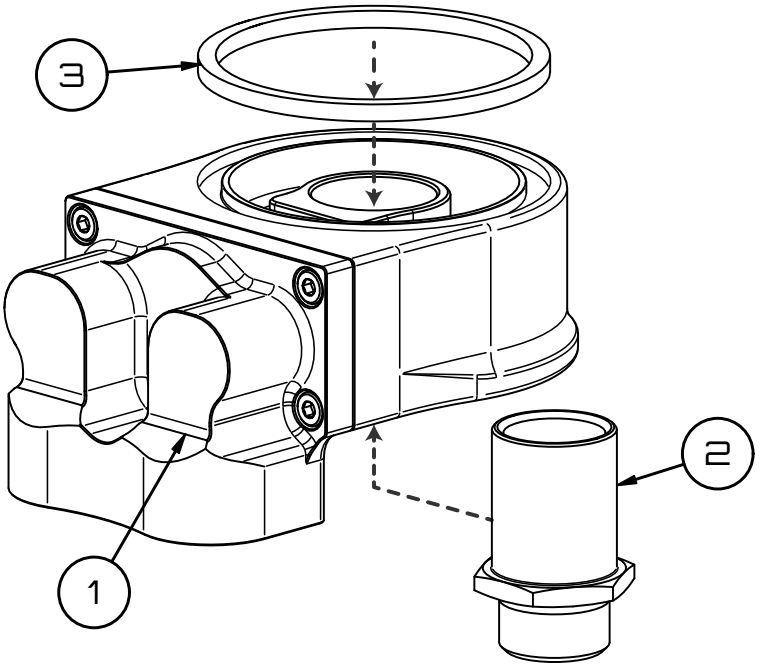

Figure 1 - ENV-135 Schematic

TECHNICAL SPECIFICATIONS

Max. Operating Temp.	302°F (150°C)
Min. Operating Temp.	-22°F (-30°C)
Max. Operating Pressure	300 psi (20.68 bar)
Dimensions (W x H x D)	3.2” x 1.4” x 4.6” (81.3 mm x 35.6 mm x 117 mm)
Weight	18.1 oz (514 g)
Connections	-10 SAE Straight Thread O-ring Ports, $^{7}/_{8}$-14 UNF - 2A
Housing Material	CNC-Milled 6061-T6 Billet Aluminum
Housing Finish	MIL-A-8625, Type II Anodizing
Valve Material	CNC-Milled 6061-T6 Billet Aluminum
Thermal Actuator	Brass Body, Steel Ram, Paraffin Wax
Valve Spring	304 Stainless Steel, Passivated per ASTM A967
Seals	Viton (FKM) Elastomer
Filter Screw Material	CNC-Milled 410 Stainless Steel
Estimated Service Life	> 10,000 Heat Cycles

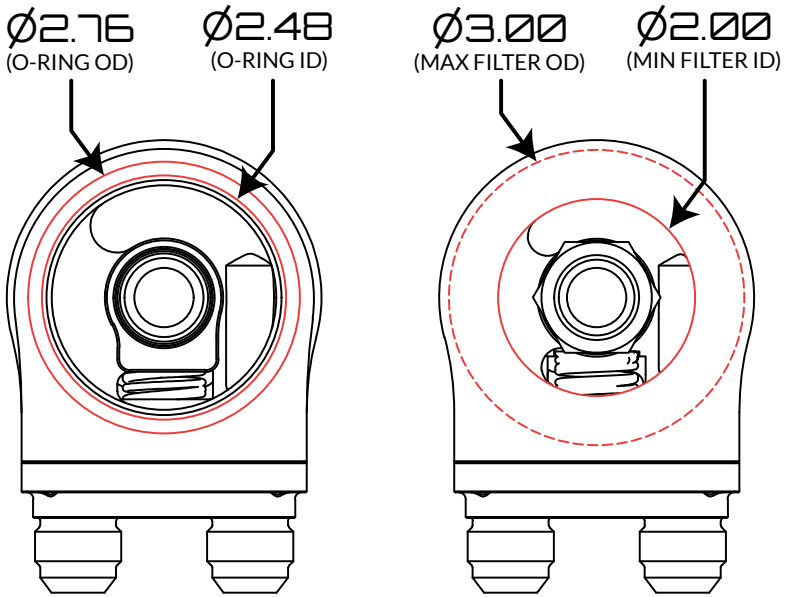

Figure 2 - Oil Filter Limits

TEMPERATURE SPECIFICATIONS

Part Number	Activation Temperature	Stabilization Temperature
T4	180°F +/- 2°F (82°C +/- 1°C)	185°F +/- 2°F (85°C +/- 1°C)
T6	200°F +/- 2°F (93°C +/- 1°C)	205°F +/- 2°F (96°C +/- 1°C)
T7	212°F +/- 2°F (100°C +/- 1°C)	215°F +/- 2°F (101°C +/- 1°C)

NOTES

⚠ This product is not recommended for use with corrosive fluids.

- The integrated thermostat accelerates warm-up and ensures oil is at the correct viscosity when used with a capable heat exchanger.
- Under no circumstances can the thermostat fail in such a way that oil flow to the engine or transmission is blocked.
- ENV-135 is rebuildable. Should the unit fail, purchase a Rebuild Kit or ship it back to Improved Racing for a professional rebuild.

💡 Rebuild Kits can also be used to change temperatures.

- When the heat extraction rate of your heat exchanger is matched to the heat load and flow-rate of the engine and engine oil, the oil temperature returning to the engine will normally register at the Stabilization Temperature shown above.

OPERATION & FLOW DIAGRAM

Figure 3 illustrates how the thermostat bypasses up to 98 percent of the total oil flow back through the oil filter while the engine is warming up. This also gradually warms the heat exchanger circuit to avoid thermal shock. Bypass continues until engine oil reaches the activation temperature.

When the activation temperature is reached, the internal bypass valve gradually closes until all oil flows through the heat exchanger circuit. This is shown in Figure 4.

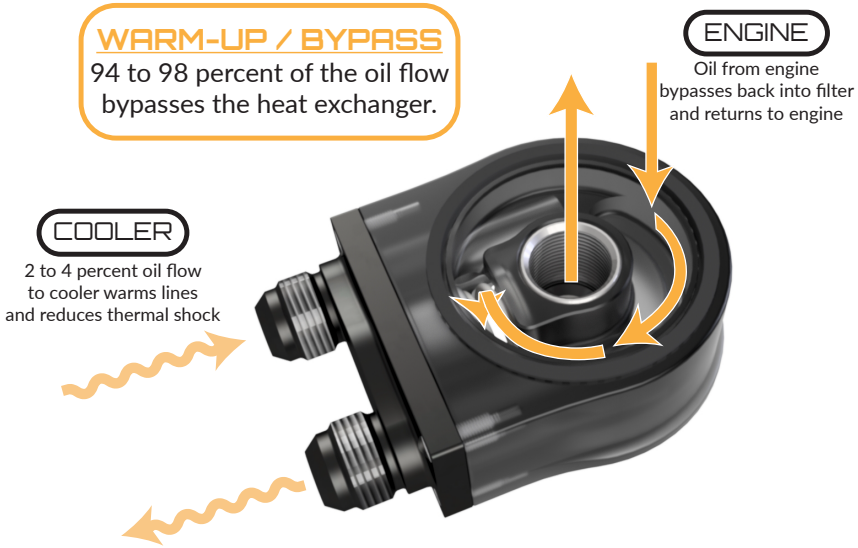

Figure 3 - Oil Path During Engine Warm-Up

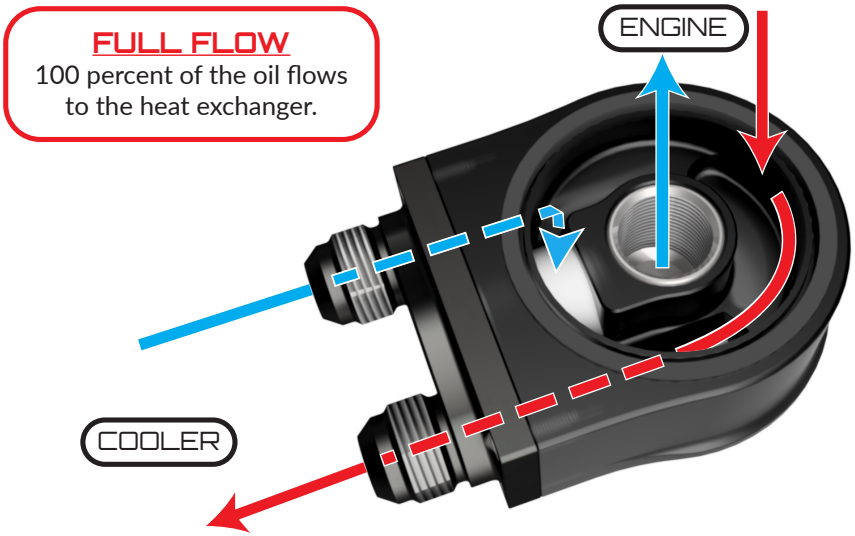

Figure 4 - Oil Path at Operating Temperature

BEFORE YOU BEGIN

WARNING: DO NOT CAP OFF THE OIL COOLER PORTS after the adapter is installed. Running the engine with the ports capped will block oil flow and result in catastrophic engine damage. If not using an oil cooler, the IN/OUT ports must be looped together to prevent engine damage.

WARNING: NEVER work under a vehicle supported only by a jack.

WARNING: This product should only be installed by a qualified mechanic. Improper installation could result in severe engine damage.

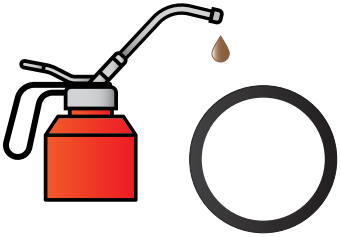

Lubricate O-rings prior to installation to prevent damage and ensure a leak-free seal.

PREPARING FOR INSTALLATION

1. Open the hood and / or raise the vehicle to access the oil filter.
2. Support the vehicle with automotive-certified jack stands, power lift, or wheel ramps.

Lift points can be found in the vehicle owners manual.

3. Remove any covers or panels necessary to access the oil filter.
4. Place a drain pan under the oil filter and remove the filter.

Oil may be hot!

5. Secure the oil cooler to the vehicle.

Ensure the oil cooler is isolated from vibration.

Pre-fill the cooler with oil to prevent a dry startup.

6. Plan, measure and assemble the hydraulic fittings and lines.

INSTALLING ENV-135

1. Ensure that the O-ring is properly seated in the top of ENV-135 as shown in Figure 1.
2. Lubricate the O-ring with oil.
3. Using a 1 $^{1}/_{8}$" socket, secure ENV-135 to the oil filter threads on the engine block or oil pan using the included filter screw (HSC-104X).
4. Torque HSC-104X to 20 lb-ft (27 N-m).
5. Lubricate the sandwich plate fitting flares with oil and connect the oil lines.
6. Torque both fitting connections on ENV-135 to 25 lb-ft (34 N-m).

Use aluminum tools to avoid damage to fittings.

COMPLETING THE INSTALLATION

1. Fill a new oil filter with oil and install the filter onto the sandwich plate.

Lubricate the oil filter seal with engine oil prior to installation.

2. Check the engine oil level and add oil if needed.
3. Remove the fuel pump fuse(s) or disconnect the ignition circuit.

Consult the vehicle's factory owners manual for the fuse location.

4. Crank the engine over to build oil pressure.
5. Replace any fuse(s) removed and/or reconnect the ignition circuit.
6. Start the vehicle and inspect for leaks.
7. Turn-off the vehicle and inspect the engine oil level. Add oil if necessary.
8. Reinstall any underbody panels and safely lower the vehicle back onto the ground.
9. Re-inspect the oil lines and fittings for leaks after 100 miles of driving.

Installation is now complete. Thank you for purchasing an Improved Racing product!