REMOTE OIL FILTER MOUNT WITH INTEGRATED THERMOSTAT

PART NO. ENV-171

MADE IN USA

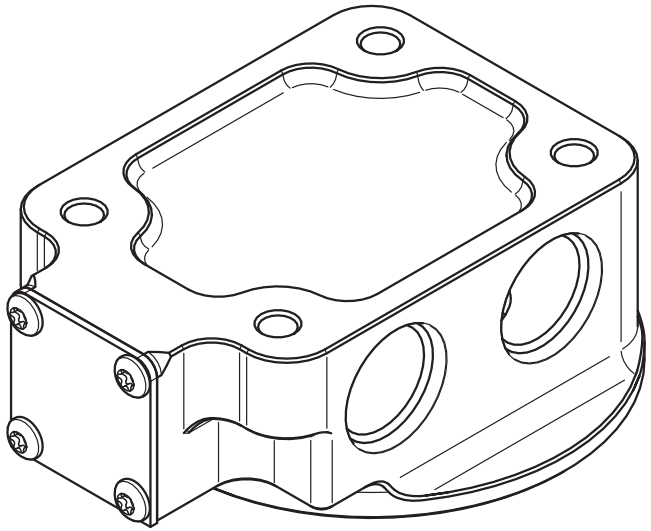

Important: Read these instructions in their entirety prior to installation.

For contact information, visit www.improvedracing.com

Copyright © 2008-2024 Improved Racing Products, LLC. All rights reserved.

Rev 240421

APPLICATIONS

- ENV-171 is an oil filter mount that has an integrated thermostat. It is designed to be used with a heat exchanger.
- The maximum supported oil filter gasket OD is 3.55 inches (90 mm) and the minimum supported oil filter gasket ID is 1.91 inches (49 mm).
- Requires oil filter adapter screw, sold separately. See table below.

Part Number	Filter Thread Size
HSC-5000-01	3/4”-16
HSC-5022-01	13/16”-16
HSC-5021-01	M20x1.50
HSC-5023-01	M22x1.50

- A list of compatible filters is available on the product page on Improved Racing’s website at www.improvedracing.com.

⚠ **WARNING: Not recommended for use with corrosive fluids.**

SCHEMATIC, HARDWARE & PARTS LIST TABLE

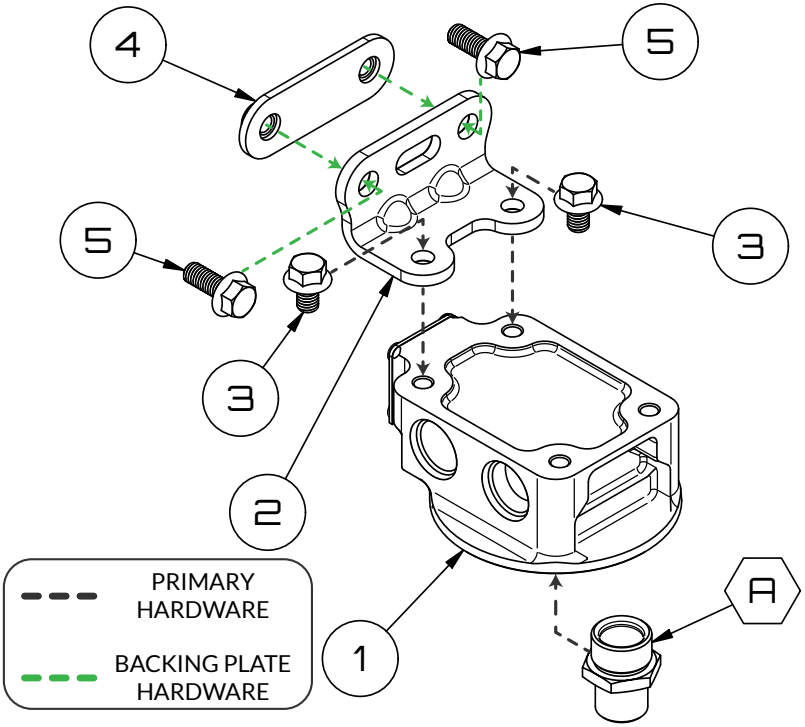

Figure 1 - ENV-171 Schematic

Item	Qty	Part Number	Description
1	1	ENV-171	Remote Filter Mount with Thermostat
2	1	HBK-2000	Mounting Bracket
3	2	HSC-1048	Mounting Bracket Screw
4	1	ENV-171-07	Backing Plate for Mounting Bracket
5	2	HSC-1041	M8 Screws for Backing Plate
A	1	HSC-####	Oil Filter Adapter Screw (Choose Size)

TECHNICAL SPECIFICATIONS TABLE

Maximum Operating Temp.	302 °F (150 °C)
Minimum Operating Temp.	-40 °F (-40 °C)
Maximum Operating Pressure	300 psi (20.68 bar)
Maximum Oil Filter Outside Diameter	3.55 in (90 mm)
Minimum Oil Filter Inside Diameter	1.91 in (48 mm)
Dimensions (W x H x D)	3.60 inch x 1.65 inch x 4.45 inch (91 mm x 42 mm x 113 mm)
Weight (Item #1 Only)	15.6 ounces (443 grams)
Fitting Ports	4 x -10 SAE J1926-1 Straight Thread O-ring Boss Ports, 7/8"-14 UNF - 2B
Filter Screw Port	M22x1.50 - 6H
Housing Material	6061-T6 Billet Aluminum
Housing Finish	MIL-A-8625 Type II Anodizing
Valve Material	6061-T6 Billet Aluminum
Thermal Actuator	Brass Body, Steel Ram, Paraffin Wax > 10,000 Heat Cycles
Valve Spring	304 Stainless Steel, Passivated per ASTM A967
Seals	Viton (FKM) Elastomer
Filter Screw Material	410 Stainless Steel
Mounting Brackets	5052-H32 Aluminum, ISO Anodized, Black
Mounting Bracket Screws	M8x1.25 x 12mm L Class 10.9 Alloy Steel Hex Flange Screw, Zinc Plated, 12mm Tool Size

Mounting Bracket Backing Plate	5052-H32 Aluminum, ISO Anodized, Black, M8x1.25 Threaded Inserts
Backing Plate Screws	M8x1.25 x 20mm L Class 10.9 Alloy Steel Hex Flange Screw, Zinc Plated, 12 mm Tool Size

THERMOSTAT TEMP. SPECIFICATION TABLE

Part Number Suffix	Activation Temp.	Stabilization Temp.
-T1	140°F +/- 2°F (60°C +/- 1°C)	145°F +/- 2°F (63°C +/- 1°C)
-T2	160°F +/- 2°F (71°C +/- 1°C)	165°F +/- 2°F (74°C +/- 1°C)
-T4	180°F +/- 2°F (82°C +/- 1°C)	185°F +/- 2°F (85°C +/- 1°C)
-T6	200°F +/- 2°F (93°C +/- 1°C)	205°F +/- 2°F (96°C +/- 1°C)
-T7	212°F +/- 2°F (100°C +/- 1°C)	215°F +/- 2°F (101°C +/- 1°C)

PRODUCT NOTES

- The integrated thermostat accelerates warm-up and prevents over-cooling of the fluid by the heat exchanger.
- Under no circumstances can the thermostat fail such a way that oil flow to the engine or transmission is blocked.
- Should the unit fail, purchase a rebuild kit or ship it back to Improved Racing for a rebuild.

The rebuild kit can also be used to change thermostat temperature.

- The fluid temperature exiting the ENV-171 will typically settle at the stabilization temperature shown in the Temperature Specification Table if the heat rejection rate of the heat exchanger exceeds the heat load of the system.

OPERATION & FLOW DIAGRAM

1. Figure 2 illustrates how the thermostat bypasses up to 98% of the total

flow back to the engine or transmission during warm up. This occurs because the heat exchanger is more restrictive to flow than the bypass passage, and the majority of the fluid will follow the path of least restriction.

2. When the activation temperature listed in the Temperature Specification Table is reached, the internal valve begins to close and gradually forces the fluid through the cooling circuit. This is illustrated in Figure 3.

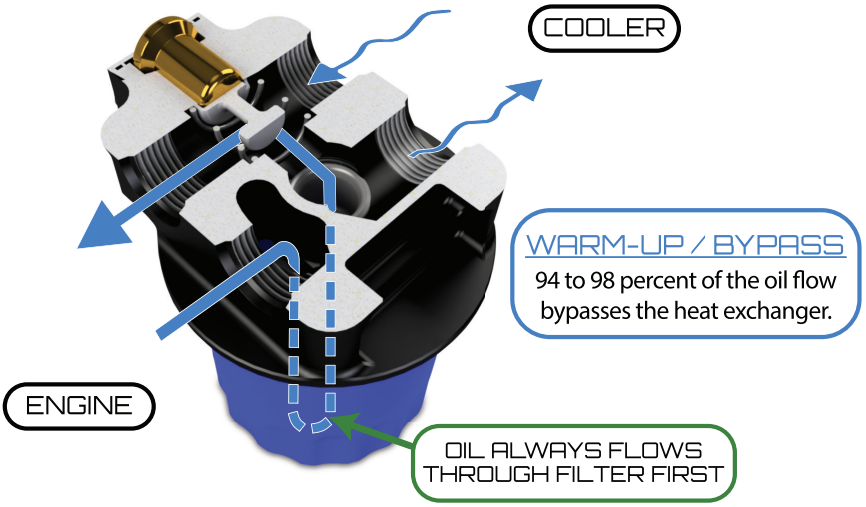

Figure 2 - Bypass Flow

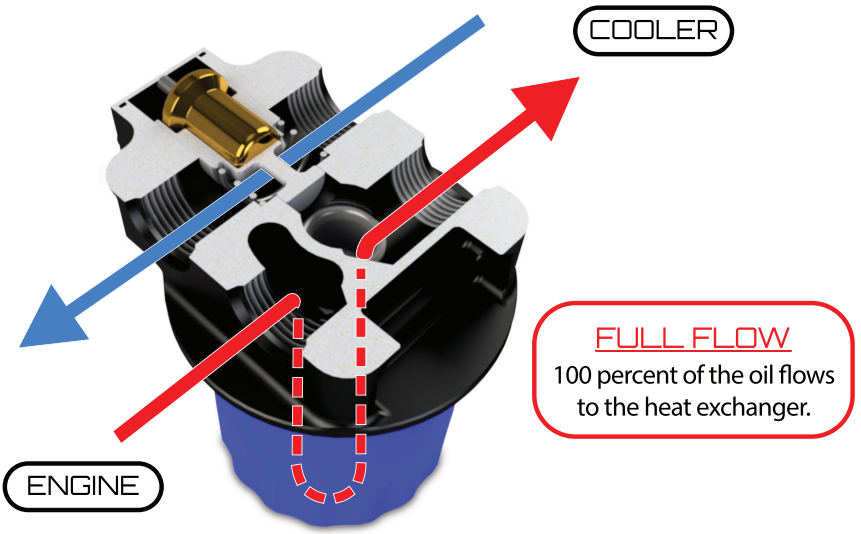

Figure 3 - Full Flow Through Heat Exchanger

MOUNTING CONFIGURATIONS

- Attach the mounting bracket to ENV-171 using the provided M8 screws in one of the configurations shown in Figure 4.
- Use at least two holes to secure the ENV-171 to a sturdy part of the vehicle such as the frame or firewall using M8 or $^{5}/_{16}$" hardware.
- Use the ENV-171-07 backing plate for reinforcement when through-mounting to thinner panels.

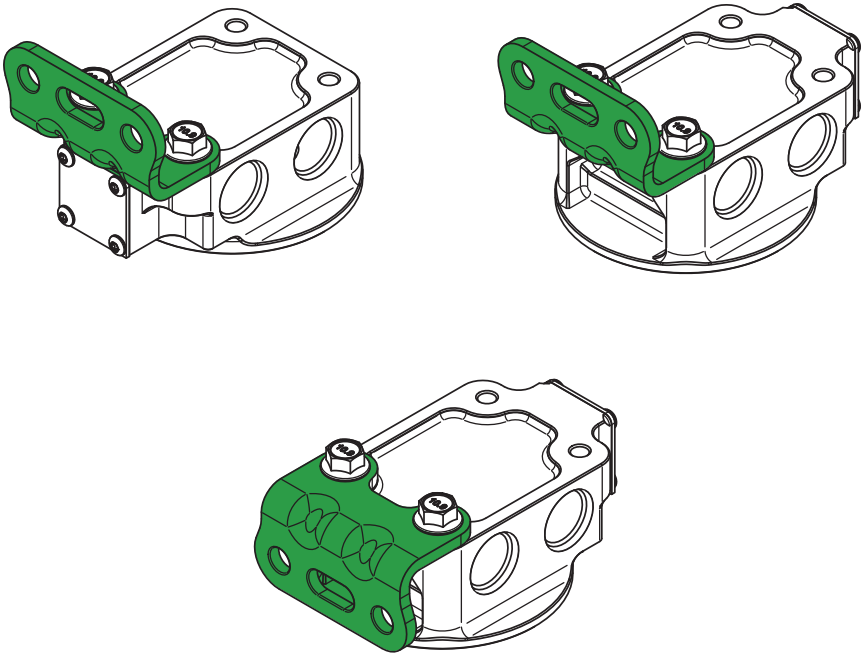

Figure 4 - Mounting Bracket Orientation Options

BEFORE YOU BEGIN

WARNING: DO NOT CAP OFF ANY OF THE OIL PORTS. Running the engine with the ports capped will block oil flow and result in catastrophic engine damage.

WARNING: This product is only designed to be used with remote oil filter systems and a heat exchanger. DO NOT plug the COOLER ports. Loop the lines together if removing the heat exchanger.

WARNING: This product should only be installed by a qualified mechanic. Improper installation will result in severe engine damage.

Use aluminum tools to avoid damaging the aluminum fittings.

Lubricate all 37° flares on the adapter fittings before final tightening.

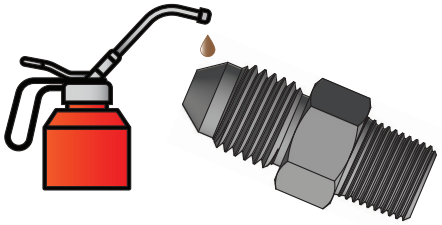

Lubricate O-rings on adapter fittings prior to installation to prevent damage and ensure a leak-free seal.

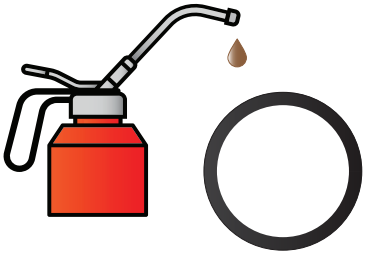

INSTALLATION INSTRUCTIONS

1. Verify that all parts shown in Figure 1 are present before proceeding.
2. Optional: Clean the short side of the oil filter adapter screw with iso-propyl alcohol or thread lock primer. Apply red thread lock, such as Loctite 263, to the **short end only** of the oil filter adapter screw as shown in Figure 5.
3. Install the filter adapter screw into ENV-171 (refer to in Figure 1) and torque to **25 lb-ft (34 N-m)**.
4. Allow at least 10 minutes for the thread lock to set. It will be fully cured in 24 hours.

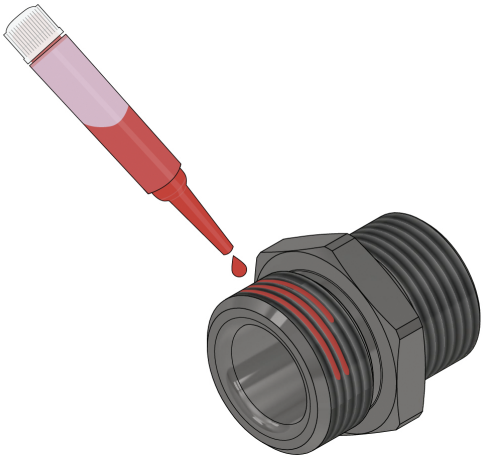

Figure 5 - Apply Thread Lock to the Short End of the Filter Screw

5. Install the line adapter fittings into ENV-171 and torque to approximately **20 lb-ft (27 N-m)**.
6. Secure the filter mount to the vehicle using the provided mounting bracket and M8 or $^{5}/_{16}$" hardware.
7. Configure and assemble the hydraulic lines for the system.
8. Pre-fill and install a new oil filter after lubricating the seal with oil.
9. Connect and tighten the system lines.

⚠ **DO NOT overtighten.**

10. Secure the heat exchanger to the vehicle.
11. Refill all fluids in the system to their specified levels.
12. Prime the system to build fluid pressure and fill the lines and heat exchanger with oil before starting. This can be achieved by temporarily removing the fuel pump fuse to prevent starting, then cranking the engine over 2-3 times for about 5 seconds at a time.
13. Start the vehicle and inspect for leaks.
14. Turn-off the vehicle and inspect the fluid level. Add fluid if necessary.
15. Re-inspect the hydraulic lines and fittings for leaks after 1-2 heat cycles.

🏁 You're done! Thank you for purchasing an Improved Racing product!