ATI PERFORMANCE PRODUCTS

Installation Instructions

6718 Whitestone Road • Gwynn Oak, Maryland 21207 • (410) 298-4343
FAX: (410) 298-3579 • www.atiracing.com

T400 WICKED QUICK™ BILLET ALUMINUM TRANSBRAKE

Part # 403085
P-R-N-1-2-3
NOTE: Brake works in both 1st and 2nd

PACKING LIST

- ☐ (1) Billet aluminum Valve Body Assy.
  Includes: • Separator Plate
  • (2) Valve Body Gaskets #403222
  • Manual Valve
  • 1/2" Nylon Ball
- ☐ (1) #403099 Solenoid with Adapter
- ☐ (1) #407010 Modulator Plug
- ☐ (1) #940330 Electrical Connector
- ☐ (16) #405750 HD Direct Drum Springs
- ☐ (6) #951248 5/16-18 x 1" Counterbore Screws
- ☐ (3) #951249 5/16-18 x 1½" Counterbore Screws
- ☐ (3) #951441 1/4-20 x 1¼" Counterbore Screws
- ☐ (1) #951066 1/4-20 x 3/4" Button Head Cap Screw
- ☐ (1) #919091 Wicked Quick Set-Up Notice
- ☐ (1) #919142 Safety Notice
- ☐ (2) #Z20035 Wicked Quick Decals
- ☐ (1) #403085-I Instruction Sheet

Accidental transbrake engagement poses a serious safety risk! You must have safety electronics in place to safeguard against accidental engagement of the transbrake solenoid when not intended.

ATI can assume no responsibility for workmanship or driving procedures that are out of our control. Read all instructions carefully Failure to comply may cause extreme damage, possible explosion of the transmission and/or injury or death to the driver!

For your protection, always use a transmission shield, blanket or SFI case!

**** DO NOT SHUT OFF THE ENGINE WHILE IN THE TRAPS! ****

VOLTS!

Note: For units running more than 250 psi, you MUST have a minimum of 14 volts at the starting line with all necessary accessories operating.

All modifications are essential. Follow as shown!

STEP 1 - High Drum
Preparation of the high clutch drum is extremely important. Removal of the piston is necessary. A 1/16" inch (.063") bleed hole is drilled through the drum in the area behind the piston. It is best to drill from the inside out placing the hole as close to the outer sealing portion as possible (big lip seal). The drill may be held at an angle for more drilling room (Figure 1).

Reinstall the piston in the drum using only two (2) lip seals, the outer and the inner. ***Do not use the center seal!***

Discard the 16 original piston springs and replace with the special springs provided with this kit.

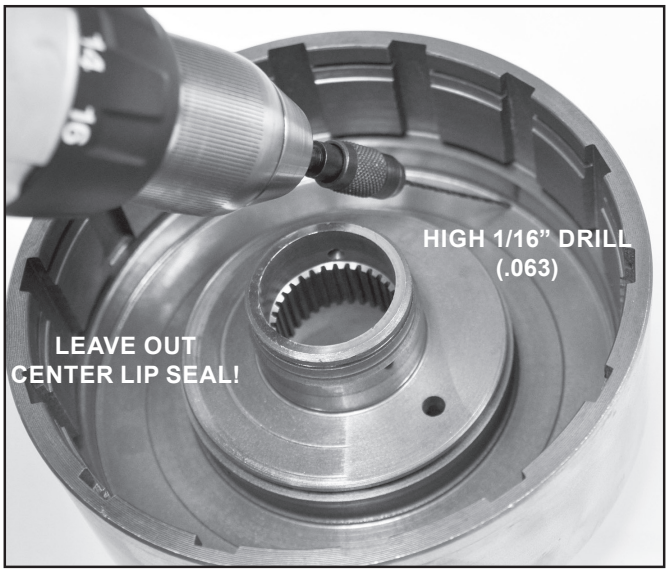

Figure 1

STEP 2 - Transbrake Electrical Connection
This connection is activated by applying 12 (or 16) volts into the spade connector where the kick-down lever used to be in the OEM case. An SFI case will require #940340 Pass Thru Connector. Use minimum 16 gauge wire and a 20 amp fuse. Solenoid pulls about 6 to 8 Amps.

STEP 3 - Use a Stock 400 Modulator Valve
Inspect the valve. It *cannot* be modified or ground in any way!

Case Preparation: This valve body requires no case modifications.

Intermediate Servo: Leave out the intermediate servo, servo spring, parts and intermediate band.

Valve Body Gaskets: Run a flat file or a whetstone over the case to remove any high spots that might cause a crossover leak and install supplied gaskets.

Manual Valve: Use supplied manual valve, dip it in clean transmission fluid and install in your ATI valve body.

Rear Servo: The rear servo is installed in the normal manner. The two (2) accumulator rings may be removed if desired. Use stock springs and parts.

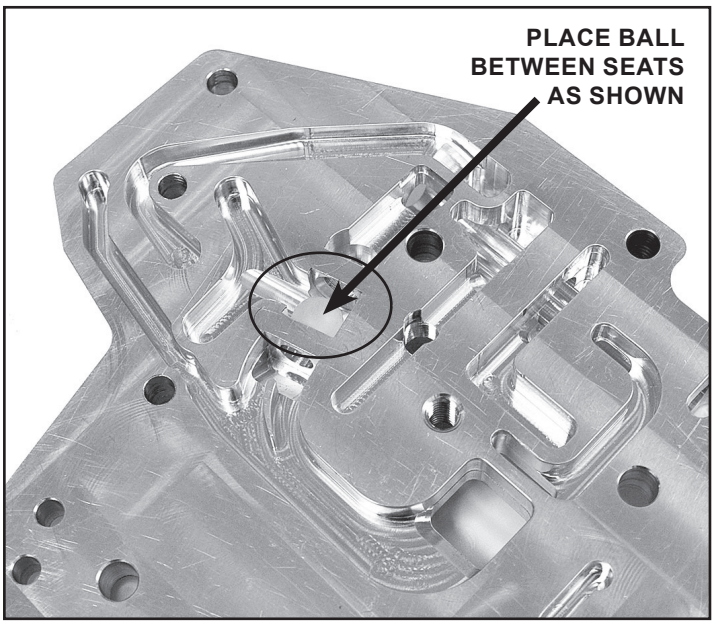

(Figure 2)

CENTER SUPPORT - Installation of Teflon rings

(ATI part #405471 HD Center Support shown)

Step 1 - Fill the groove with assembly lube. (Figure 3)

Step 2 - Hand shape rings as round as possible.

Step 3 - Fit a ring into the groove.

Step 4 - Use the same procedure for the front pump.

The assembly lube will hold the rings in place during assembly, however they will not seal until the transmission has been run, don't expect them to pass an air check.

Note! If using an OEM Center Support, you MUST leave the second ring off!

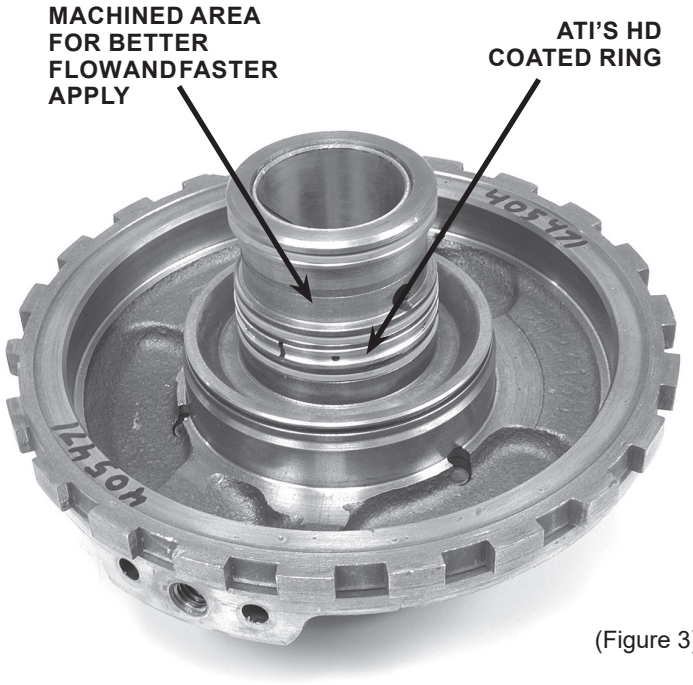

(Figure 3)