ATI PERFORMANCE PRODUCTS

Installation Instructions

6718 Whitestone Road • Gwynn Oak, Maryland 21207 • (410) 298-4343
FAX: (410) 298-3579 • www.atiracing.com

ATI T400 SUPERCASE® / BELLHOUSING

Part # 400011 / 400013

NOTICE – The ATI SuperCase is SFI 4.1 manufacturer certified. The ATI Bellhousing is SFI 30.1 manufacturer certified. These certifications are valid for a period of 5 years. Upon expiration, the units must be returned to ATI for inspection and recertification. This recertification is mandated by the SFI Foundation and is required by the competition sanctioning bodies.

The ATI SuperCase is engineered to accept GM TH400 spec replacement parts. The ATI Bellhousing may be installed to the case before or after the transmission assembly. Standard TH400 assembly procedures should be followed unless noted otherwise.

Case Venting – It is important to properly vent the transmission to the atmosphere. ATI recommends using a length of semi-clear, high temp, Teflon based tubing (1/4" OD, 1/8" ID) with a Push-In fitting (1/4" tube, 1/8" NPT). The tubing should be routed to some type of catch bottle to prevent any fluid from reaching the track surface. The vent hole is near the top of the case.

Assembly Notes

- Pipe thread holes need to be sealed with Teflon pipe sealant or equivalent.
- The 6 – 7/16" bolts (included with the bellhousing) that attach the bellhousing are to be torqued to 35 ft/lb and use blue Loctite. (For optional SuperCase to Bell Stud Kit refer to Instruction #950263-I.)
- Case is supplied with two snap rings. The .090 ring goes above the center support. The .105 ring goes above the intermediate pressure plate. ***The tapered snap ring is no longer used.***

BOLT NOTICE - The ATI bellhousing is attached to the SuperCase using six (6) 7/16" bolts. ***The 2 short bolts MUST be installed at the bottom.*** The bolts should be torqued to 35 ft/lb using red "262" Loctite.



Hardware list:
(4) # 951104 ..... 7/16-14 x 1 1/4 bolts
(2) # 951103 ..... 7/16-14 x 1 bolts
(6) # 953015 ..... Serrated washers

ATI is not responsible if you strip the bottom threads of the case!

T400 Transmission Case Torque Specs - recommended by ATI Performance Products:

Transmission to Engine Bolts	35 ft lbs
Oil Pan to Case Bolts	12 ft lbs
Tailhousing to Case Bolts	25 ft lbs
Front Pump to Case Bolts	13 ft lbs
Valve Body to Case Bolts	13 ft lbs
Parking Lock Pawl Bracket Attaching Bolts	15 ft lbs
Line Pressure Plugs	5 ft lbs
Input shaft total end play	.020" to .035"
Output shaft total end play	.010" to .020"



For SuperCases and adapter plate set-ups the flexplate adapter must go onto the rear of the crank first then install the flexplate and bolts.

Part #400013F

ATI PERFORMANCE PRODUCTS T400 SuperCase®

After two long years, from concept to finished part, ATI became the first company to design, produce, machine, assemble and run an aftermarket Turbo-Hydramatic 400, 3-speed transmission in a non-OEM case. Starting with laser scanning of OEM cases, and the use of original GM blueprints, ATI was able to create prototypes using the latest 3D polymer printing techniques to ensure final castings were able to offer all the benefits of a brand new high performance cast aluminum case, while retaining the specs and measurements of GM's original TH400.

The 356-T6 aluminum casting is produced in the United States, and 100% machined in-house on ATI's new dedicated Horizontal CNC machines. The stronger casting can handle more horsepower and significantly more line pressure over the OEM case, and it's SFI-certified, eliminating the need for external or internal scatter shields. It's unique 3-piece design allows it to accept any of ATI's SFI bell housings for GM, Chrysler, Ford and Toyota, along with various other bell housings on the market.

The T400 SuperCase® was in test cars and winning races before it was ever released to the public in order to ensure flawless performance for our customers. The case was such an improvement over the OEM case, that when it debuted at the annual SEMA Show, it won SEMA's prestigious 2013 Best New Racing Product Award. When only the highest quality performance products are required, ATI has answered the call for over fifty-five years.

Part #	Description
400013	SuperCase - Case Only
400013MD-LU	SuperCase - Case Only, Lock-Up w/Sensor Ports (MACHINED CASTING)
400011	SuperCase with Chevy Bell
401935	SuperCase Tailhousing w/ roller bearing - OEM Length
401936	SuperCase Tailhousing w/ roller bearing - PG Length
983044	SuperCase Bearing
950320	Bolt Kit - ATI Bell to Case (6 bolts, 6 serrated washers)

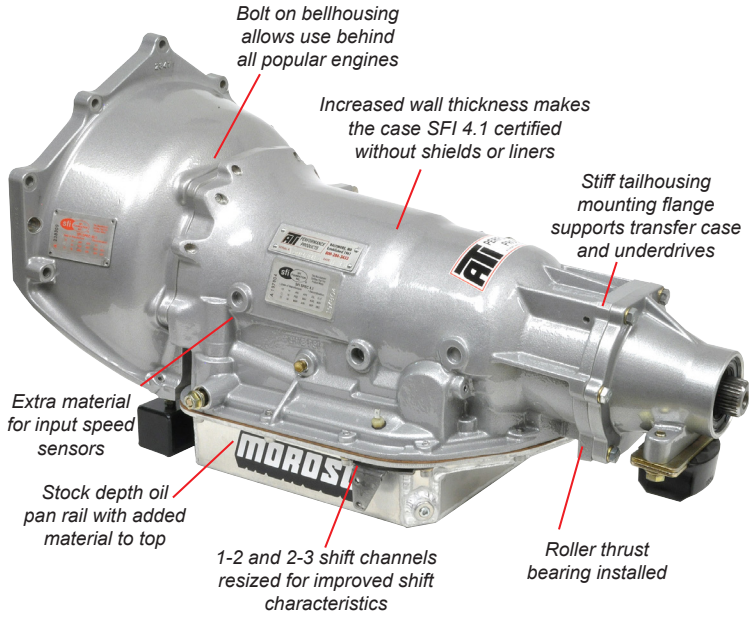

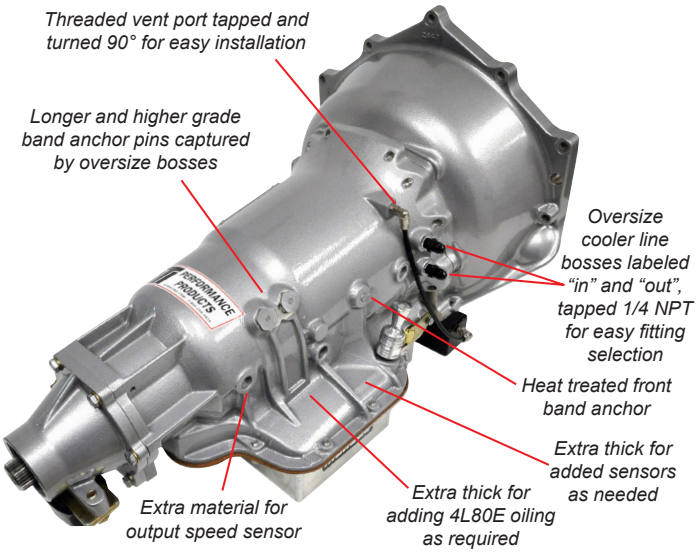

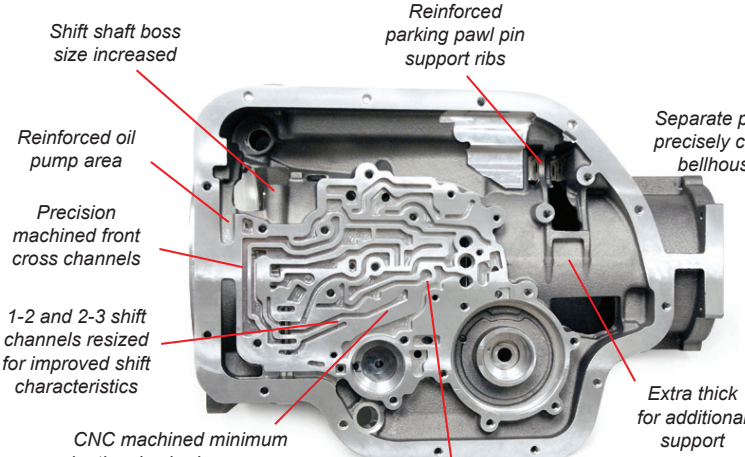

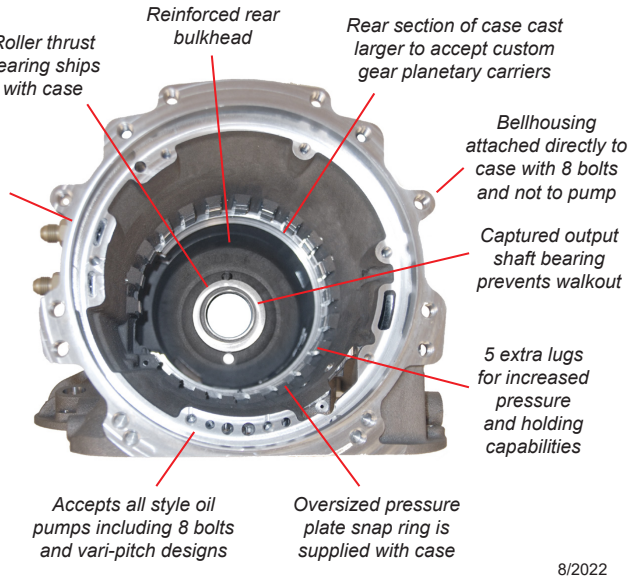

8/2022

Toll Free 800-284-3433 • www.ATIRacing.com

ATI PERFORMANCE PRODUCTS T400 Components

Wicked Quick® Billet Aluminum Transbrake Valve Bodies

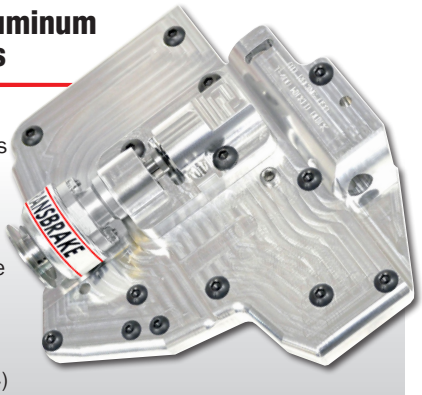

- Picks up .02 to .05 seconds over conventional steel brakes on the tree!
- Direct bolt-on replacement
- Fully 5 Axis CNC-Machined
- Ultra Fast Fluid Release Brake
- Minimum flow restriction passages
- Patented Adjustable pressure regulator (Patent #7,780,564)

REVERSE MANUAL TRANSBRAKE VALVE BODY 403091
REVERSE MANUAL TRANSBRAKE / CLEAN NEUTRAL 403091CN

Aluminum Bolt-Together Super Pumps

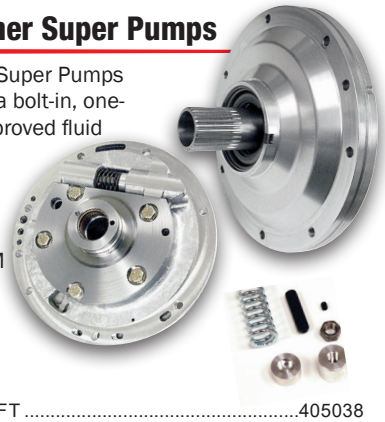

ATI's PG and T400 aluminum Super Pumps feature a 3 piece design with a bolt-in, one-piece, steel stator tube for improved fluid routing, micro-finished coated gears, and ATI's exclusive hardened steel wear plates. At just 12 lbs, the ATI pump weighs 5 lbs less than an OEM unit. Available for OEM size Stator and Input as well as larger sizes for high HP apps.

SUPER PUMP, OEM SIZE SHAFT 405038
SUPER PUMP, LARGE SHAFT 405058
ADJUST. REGULATOR KIT
ELIMINATES OEM BOOST VALVE, 185 PSI+ 405183

T400 Aluminum Direct Drum with Severe Duty 36 Element Sprag

Part #407056

- Lightweight aluminum drum holds up to 8 .060 direct clutches with .060 steels
- 36 element intermediate sprag
- ATI manufactured, outer race machined to accept OEM T-400 clutches
- Custom machined pressure plate, snap rings, springs and seals
- Steel sleeve for Teflon ring use.
- Includes: ATI's Heavy Duty Center Support and a 4 Clutch Intermediate Pack (#405430)*
- Full one year warranty on sprag failure!

Others use smaller surface area 4T80E clutches! Don't be fooled!



*Also Available:
5 CLUTCH INTERMEDIATE PACK ... 405431

T400 "Big" Shaft and Forward Drum



Lightweight T400 steel drum with "Big" 1-3/16" diameter shaft and Billet Aluminum Piston for use with ATI's "Big" Shaft Super Pump Stator Tube and Plate assembly. 30 & 60 tooth input speed triggers available.

Part # 406002

Lightweight Pans



Save some weight with a deep sheet-metal T400 pan! ATI stocks the standard Moroso T400 pan plus a custom (#403612) version featuring billet leak-free rails, 2 sensor ports, skid plate and cross-member cutout!

SFI Bell Housings



ATI offers a variety of SFI bells and adapter kits for both the PG and T400 SuperCase

100% Synthetic Super F ® ATF

Proven by many leading racers, ATI's Super F® is .01-.02 quicker than conventional ATF. It's 100% synthetic and contains Type F friction modifiers for quicker, more positive shifts. It helps keep your trans and converter cooler for improved consistency. Now available in 20W, 30W, and 8W Ultra Low Viscosity!



Toll Free 800-284-3433 • www.ATIRacing.com