ATI PERFORMANCE PRODUCTS
6747 Whitestone Road • Baltimore, MD 21207 • (410) 298-4343 • FAX: (410) 298-3579
www.atiracing.com

Installation Instructions

TURBO ADAPTER PLATE

Part # 915282

This adapter plate kit will allow you to use a Buick, Pontiac, Oldsmobile with the Chevrolet 350 Transmission. No alterations are necessary and installation is easy simple.

NOTE: On some T-400 transmissions, the inside webbing located inside the bellhousing may interfere with two of the adapter plate kit bolts. Webbing must be trimmed to clear these bolts.

PARTS LIST

1 Adapter Plate	3 Converter Spacers
2 3/8" x 3/4" Button Head Cap Screws	2 3/8" Flat Washers

Packed by: _____

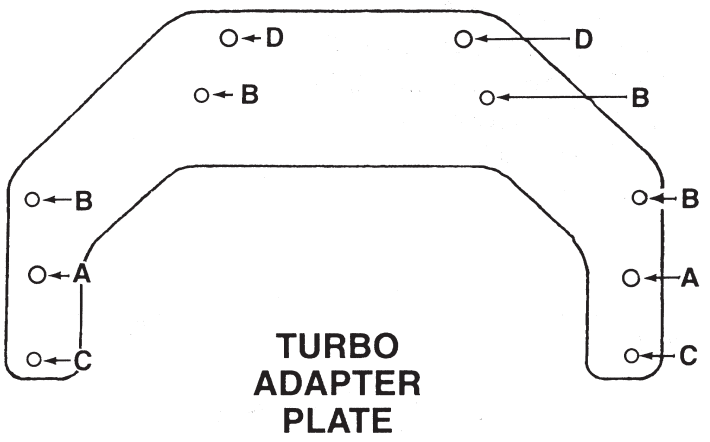

Figure 1

Step 1 Position the adapter plate on the back of the engine with the attached nuts facing the engine. Align the "A" holes on the adapter plate over the engine dowel pins. (See figure 1 for location).

Step 2 In the bolt holes marked "B" use the four (4) OEM bolts to secure the transmission to the engine. All engine bolts should be torqued to 35 ft. lbs.

Step 3 Use the two (2) bolts and washers furnished in location "D" on the adapter plate. Use OEM bolts in location "C". All engine bolts are torqued to 35 ft. lbs.

Step 4 Before bolting the converter to the flywheel, use a spacer between the converter and the flexplate. Torque flywheel / converter bolts to 30 ft. lbs. Converter "Pull Back" to the flywheel should be between 1/8" to 3/16" with the spacers.

SEE BACK FOR ADDITIONAL IMPORTANT INFORMATION!

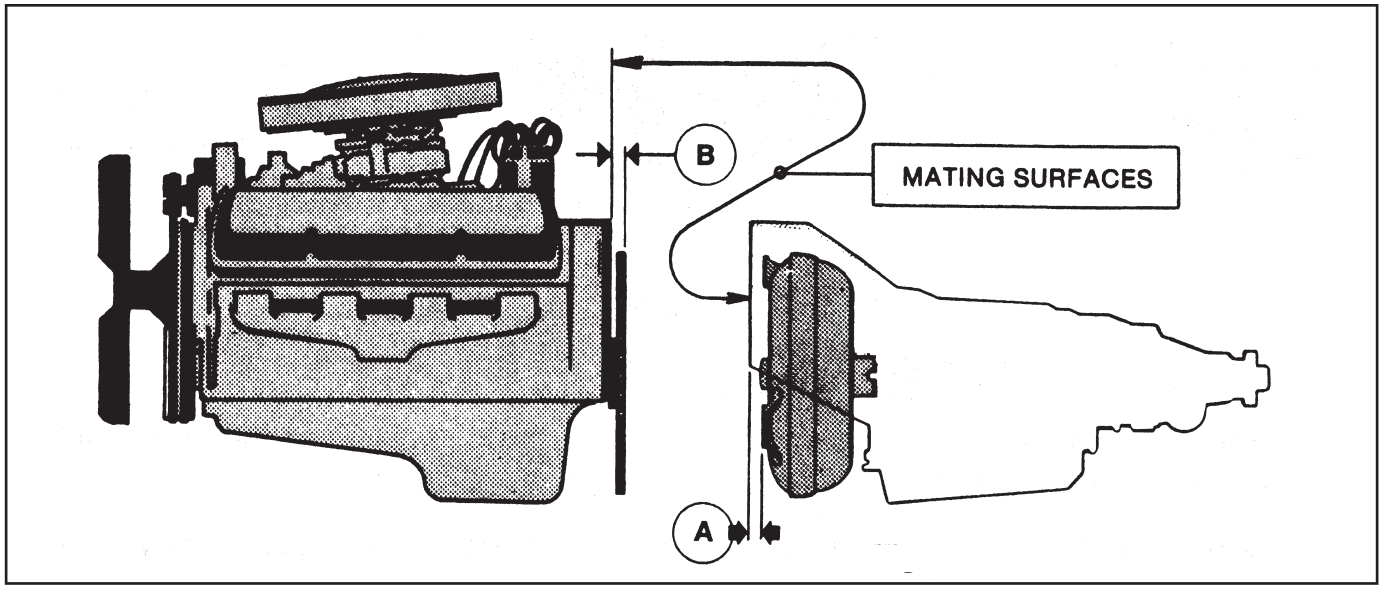

Figure 2

DEPTH CLEARANCE:

GM T-350.....1-1/8” from bell housing to pads
GM T-400.....1-3/16” from bell housing to pads
GM Powerglide.....1-1/8” from bell housing to pads
*Distance may vary either way .050”

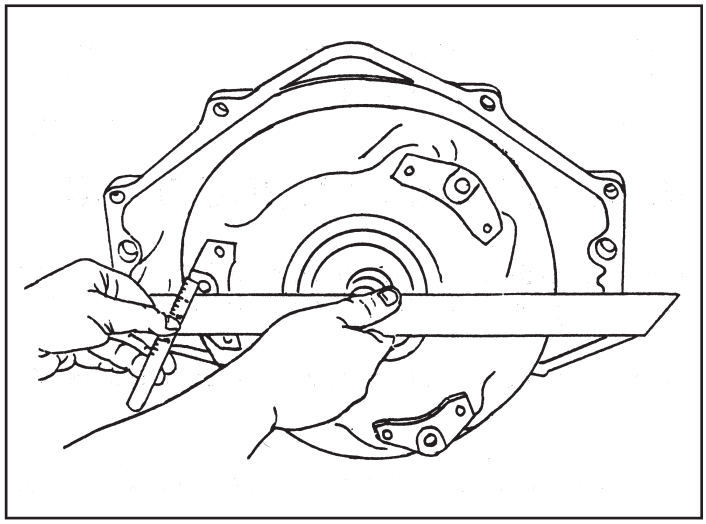

Measure the depth of mounting pad face (A) from the mounting flange face. Notice that the right hand that is holding the straight edge is also pushing the converter in toward the transmission.

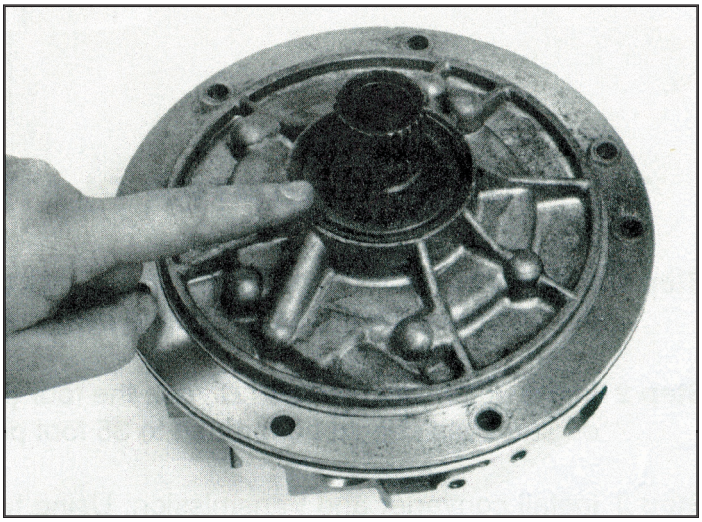

The finger points to the front pump seal which wipes the hub of the converter. This seal should be replaced by a qualified source.